PK80 Series

5-Port Pilot Operated Solenoid Valve
Rubber Seal/Sub-base Mounting type

PKS2480
2-position, single solenoid
PKD2480
2-position, double solenoid
PKD3480
3-position, closed center
PKE3480
3-position, ABR connect
PKO3480
3-position, PAB connect

Specificiations

Model No.	Unit	PKS2480	PKD2480	PKD3480	PKE3480	PKO3480
Fluid		Non-lubricated/lubricated air				
Port size		RC½, ¾				
Effective area	mm²	80(RC½), 90(RC¾)		70(RC½), 70(RC¾)		
Cv value		4.44(RC½), 5.0(RC¾)		3.89(RC½), 3.89(RC¾)		
Operating ambient temperature	℃	-5~50				
Pressure range	MPa	0.15~1.0	0.1~1.0	0.15~1.0		
Maximum frequency	cycle/min	300		180		
Response time	s	0.040		0.060		
Pilot air exhaust		Individual exhaust				
Manual override		Non-locking push button				
Mounting position		Free				
Shock resistance Vibration resistance	m/s²	150/30				
Weight	g	830 (1170)	870 (1200)	880 (1220)	880 (1220)	880 (1220)

- Supply complete-dry air to avoid freezing when temperature of valve site falls below 5℃

Electrical Specifications

Rated voltage			V	AC110, 220(50/60Hz), DC24
Permissible voltage fluctuation			%	-15 ~ +10
Power consumption	AC	Holding	VA	4.5(50Hz), 3.8(60Hz)
		Inrush	VA	5.6(50Hz), 5.0(60Hz)
	DC		W	1.8
Grade of insulation				JIS grade E
Wiring				Lead wire, DIN connector
Indicator light				LED

PK S24 80 — 04 — D24 L

Model No.

S24
2-position, single solenoid

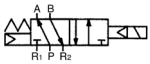

D24
2-position, double solenoid

D34
3-position, closed center

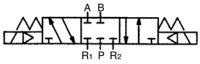

E34
3-position, ABR connect

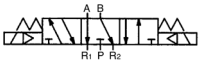

O34
3-position, PAB connect

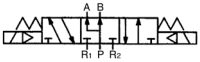

Wiring

L : Lead wire
D : DIN connector
DK: DIN connector with indicator light

Voltage

110: AC110V
220: AC220V
D24: DC24V

Port size

04: RC½
06: RC¾

※: Made to order

Construction

◎ 2-position single solenoid

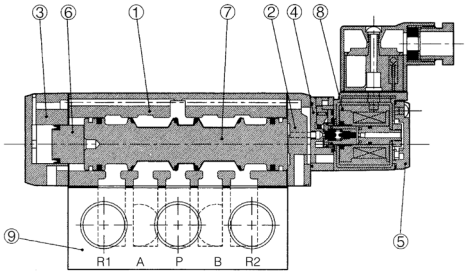

No.	Description	Material
1	Body	Aluminium die casting
2	Adapter	Aluminium die casting
3	End cover	Aluminium die casting
4	Pilot body	Polyacetal
5	Pilot cover	Plastic
6	Piston	Polyacetal
7	Spool	Aluminium • NBR
8	Coil ass'y	—
9	Sub-base	Aluminium die casting

◎ 2-position double solenoid

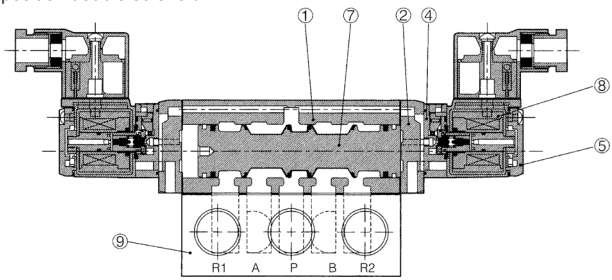

PKS2480-04

(Unit: mm)

Lead wire type

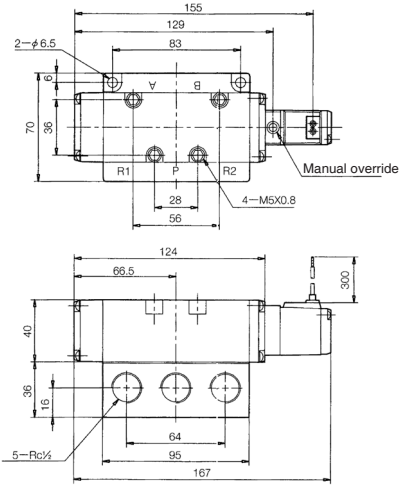

DIN connector type

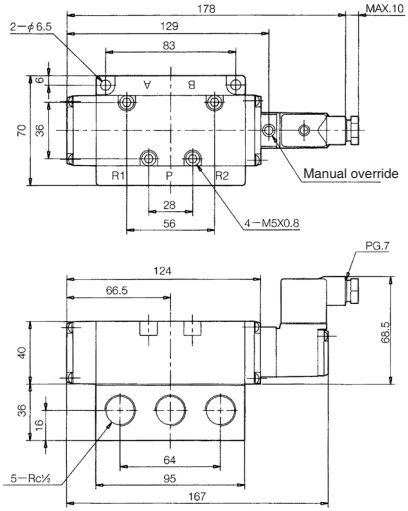

RK, PK

PKS2480-06

(Unit: mm)

Lead wire type

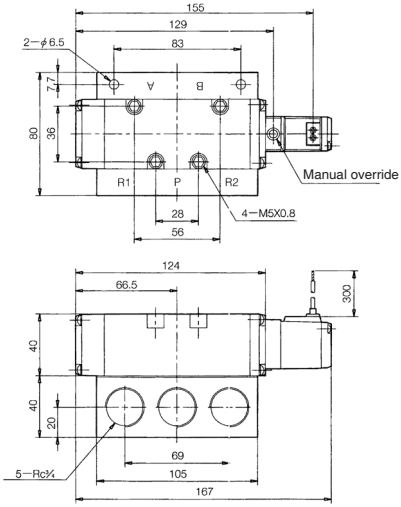

DIN connector type

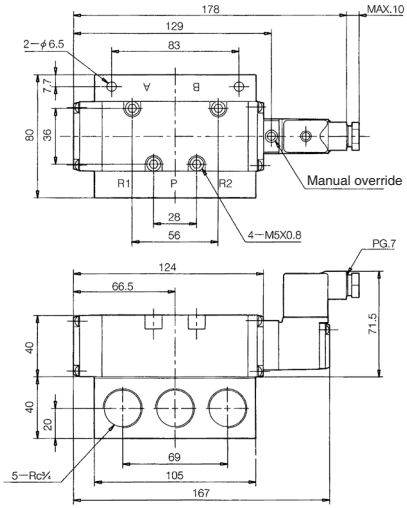

PKD2480-04

(Unit: mm)

Lead wire type

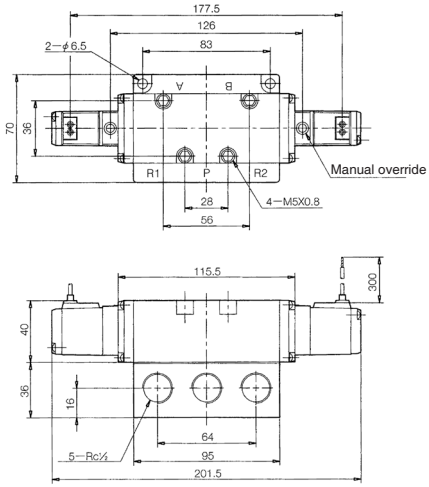

DIN connector type

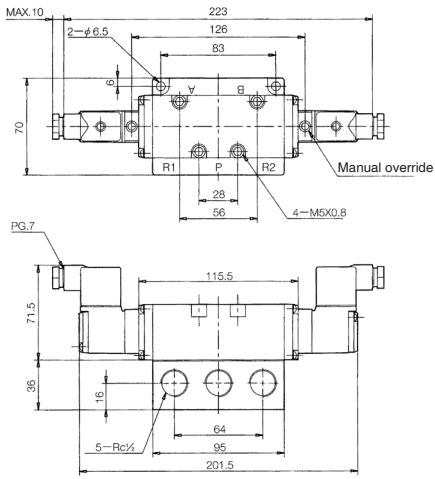

PKD2480-06

(Unit: mm)

Lead wire type

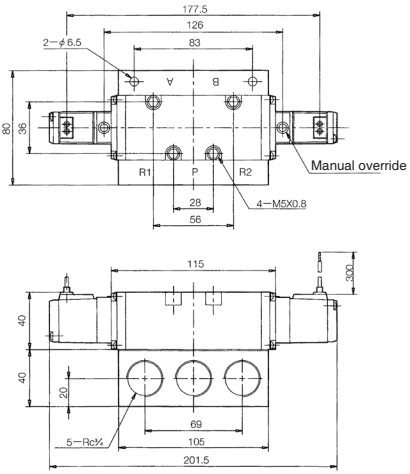

DIN connector type

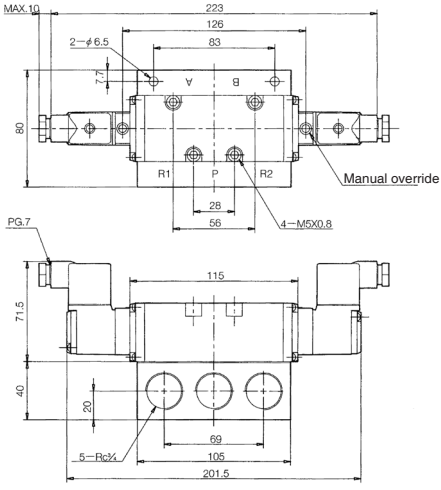

PKD3480-04, PKE3480-04, PKO3480-04

(Unit: mm)

Lead wire type

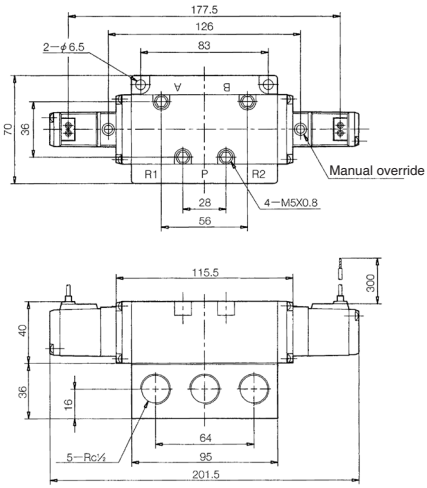

DIN connector type

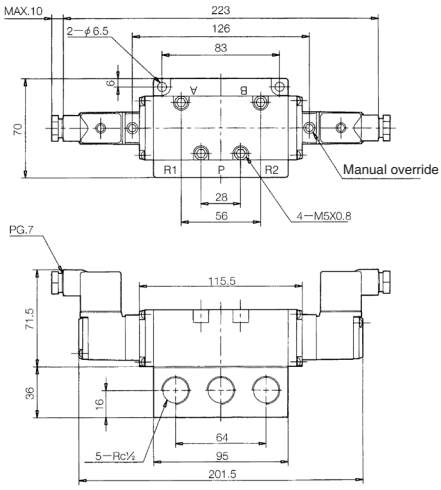

RK, PK

PKD3480-06, PKE3480-06, PKO3480-06

(Unit: mm)

Lead wire type

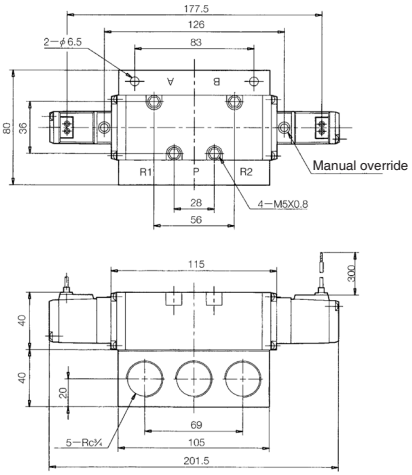

DIN connector type

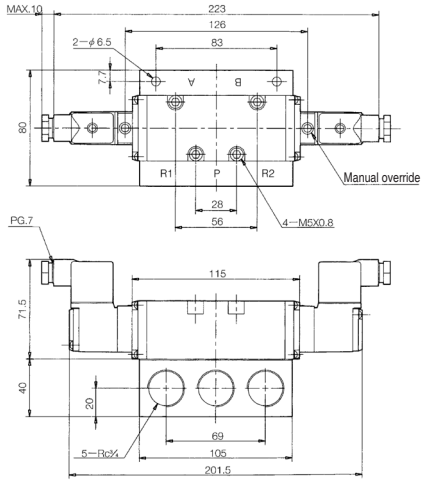

MFS□ - PK80

(Unit: mm)

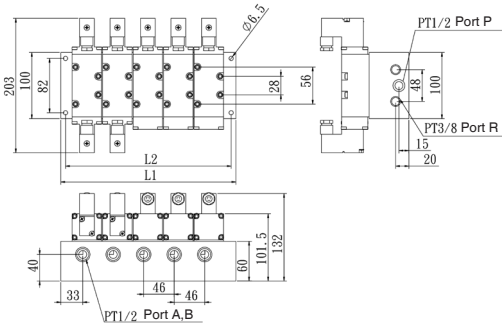

◎ When the amount of manifolds is greater than 8 rows, supply air from hole P on both sides, and discharge air from hole R on both sides.

L \ N	2	3	4	5	6	7	8
L_1	124	170	216	262	308	354	400
L_2	112	158	204	250	296	342	388